REV	SIGN	DATE	DESCRIPTION	APPROVER
C	△1	05/30'11	Add "cULus" Safety Approval logo	Steven
D	△2	08/14'17	Add color and modify Soldering temperature and Modified length formula	Zhihua

THIS IS CAD DRAWING, DO NOT REVISE MANUALLY!!!

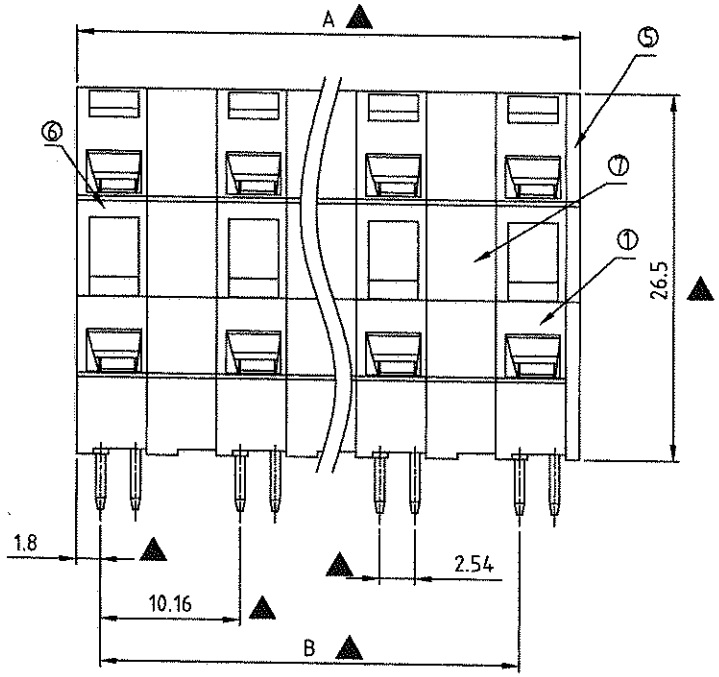

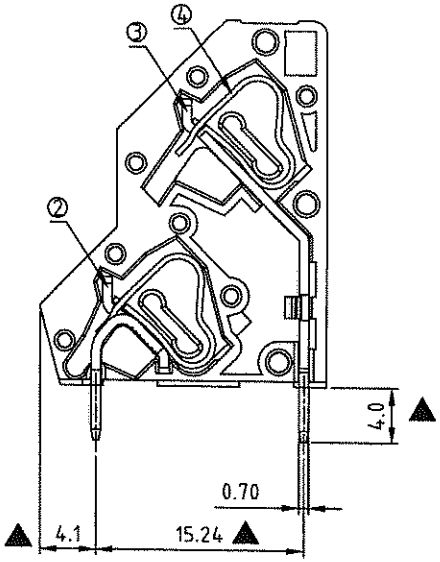

Material

- Item ① Terminal housing: Thermoplastic (UL94V-0)
- Item ② Contact pin of short: Brass, Tin plated
- Item ③ Contact pin of long: Brass, Tin plated
- Item ④ Spring clamp: Stainless steel
- Item ⑤ Terminal cover : Thermoplastic (UL94V-0)
- Item ⑥ Terminal side housing: Thermoplastic (UL94V-0)
- Item ⑦ Empty body : Thermoplastic (UL94V-0)

Electrical:	cULus
Voltage rating:	300V
Current rating:	10A
Wire range:	
Solid wire(AWG):	12-28
Stranded wire(AWG):	12-28
Wire strip length:	5-6mm
Withstanding Voltage:	1.6KV
Operating temperature:	-40°C to +115°C
△2 Soldering temperature:	260°C±5°C /5 Sec
△1 Safety Approval:	c UL us
Critical dimension:	▲

恩尼特克電子科技(深圳)有限公司
文管中心
2017.09.08
發行
ANYTEK INTERNATIONAL CO., LTD

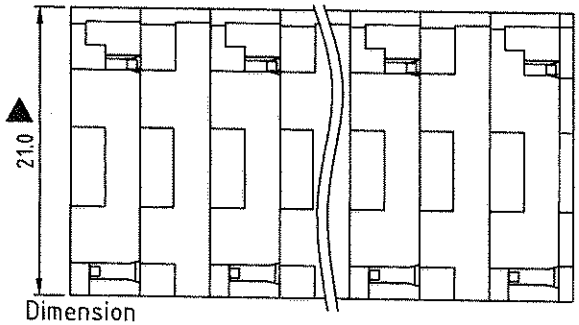

Dimension

A	(N/2-1)×10.16+6.08	△2
B	(N/2-1)×10.16	

N=Number of poles

	TOL	
	2×2p-2×6p	2×7p-2×12p
A	±0.15	±0.30
B	±0.15	±0.30

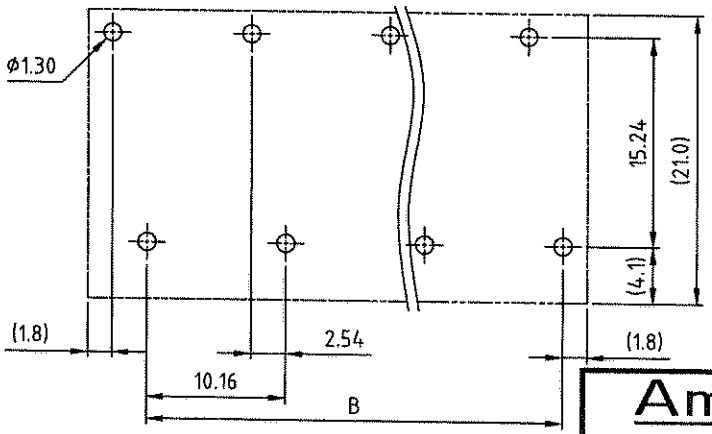

PCB Layout

HQ xx 4 0 x 1 xxxx G

No. OF POLES
02: 2×1 POLES
04: 2×2 POLES
⋮
24: 2×12 POLES

Color
0 Black
△2 3 Orange (RAL2011/P)
5 Green(RAL 6018/T)
6 Blue
8 Grey(RAL 7004/P)
C Multiple colrs

G: Pb<40000ppm

0000: "@" Logo (Standard)
000A: "ANYTEK" Mark
Any special item by customer requst. please contact sales department.

Amphenol ANYTEK

CUSTOMER COPY

ALL RIGHTS RESERVED. REPRODUCTION OR ISSUE TO THIRD PARTIES IN ANY FORM WHATEVER IS NOT PERMITTED WITHOUT WRITTEN AUTHORITY FROM THE PROPRIETOR. PROPERTY OF ANYTEK TECHNOLOGY CO., LTD

TITLE	HQ 10.16mm Series (Solder pins staggered by half the pin spacing)				
PART NO.	HQxx40x1xxxxG			DWG NO.	8HQ0103
APPROVED	CHECKED	DESIGNED	DRAWN	CUST NO.	
Jamel 2014-5-19		Steven 2011.05.30	Tony 2008.04.23	UNIT: mm	SCALE: NONE
				SHEET: 01/01	REV.: D

Tolerance	
X.	±0.50
X.X	±0.30
X.XX	±0.10
X°	±1°